N E W S

reflecta®

reflecta FLEXO DeskPro 27-1010L with Speaker

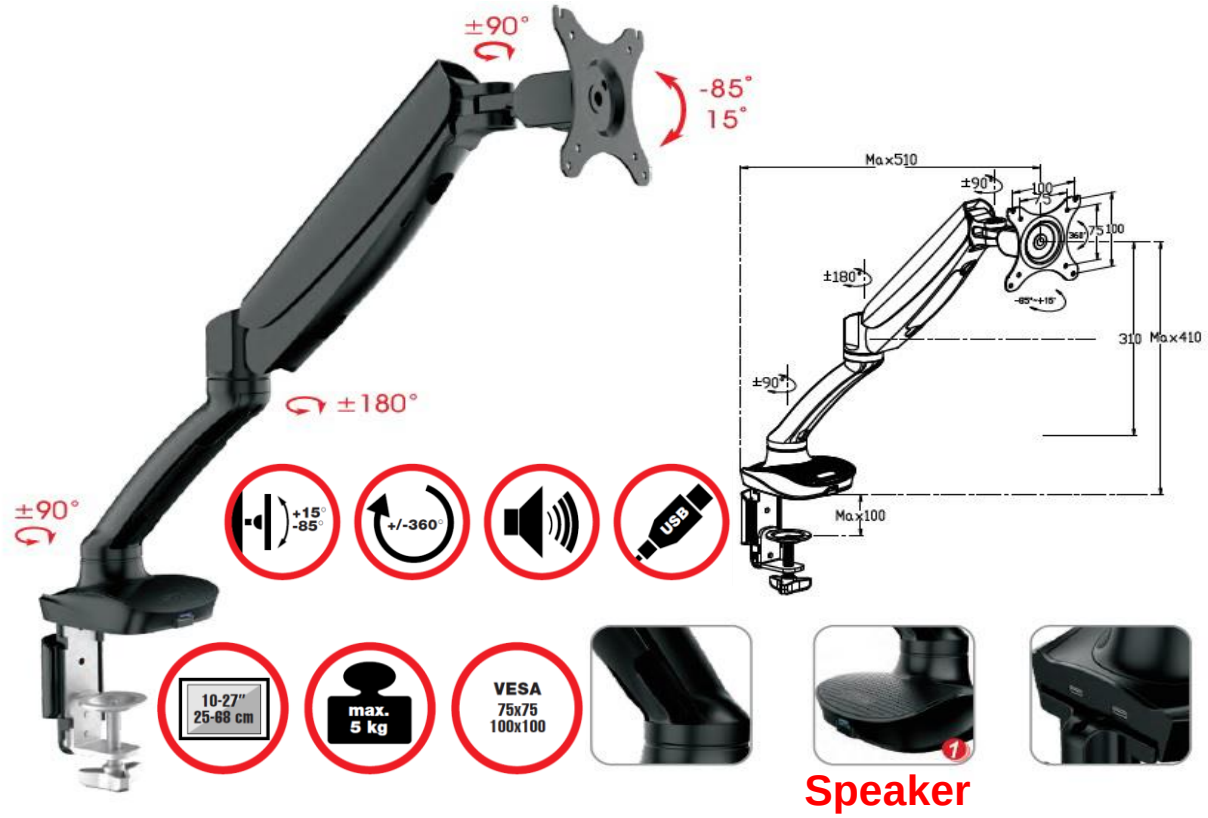

Characteristics:

- Display size: 10”-27”
- Vesa:75x75,100x100
- Max. loading weight: 5 kg
- Tilt: +15/-85°
- Gas spring mechanism, 360° any position
- Cable management
- USB 2.0 port
- 1.5 W Speaker
- Basements: Grommet & Clamp

Art.-No.: 23263
EAN: 4005039232633
Specifications are subject to change without notice

reflecta gmbh
Merkurstr. 8
D 72184 Eutingen
Phone: +49 (0) 7457 9465-60
Fax: +49 (0) 7457 9465-72
e-mail: mail@reflecta.de
http: www.reflecta.de