N E W S

reflecta®

reflecta PLANO DeskStand 23-1010 Q

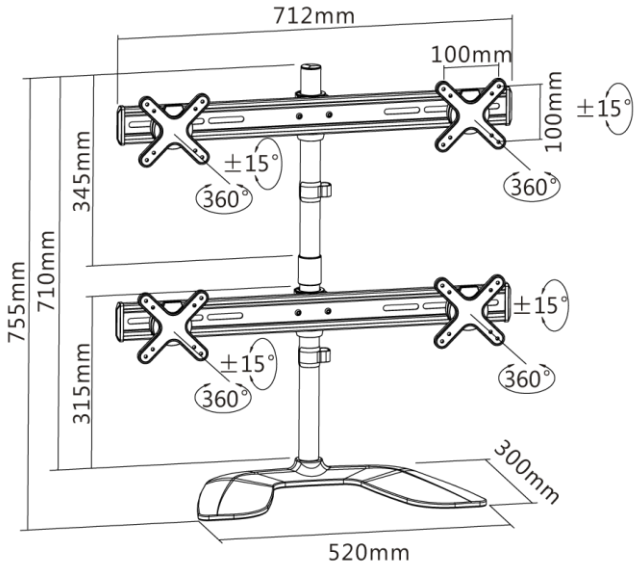

Product Information:

- Universal Monitor Support
- Max loading weight: 8 kg per arm
- Tilt: +/-15°
- 360° rotation
- Portrait and landscape view
- Length: 712 mm
- Height: 755 mm
- 13-23" / 33-58 cm
- Vesa: 75x75, 100x100

Code 23281
EAN: 4005039232817

Specifications are subject to change without notice

reflecta gmbh
Merkurstrasse 8
D 72184 Eutingen
Phone: +49 (0) 7457 9465-60
Fax: +49 (0) 7457 9465-72
e-mail: mail@reflecta.de
http: www.reflecta.de